PHARMACY PROPERTIES LLC
1764-001

A SURVEY TO MARK PROPERTY LINES
ON LOT 2, McDONALD-BLOBALM SUBDIVISION LOCATED IN THE N.W. 1/4 OF OF THE S.W. 1/4 OF SECTION 16, T.8N., R.14E. OFTHE 6th P.M., NEBRASKA CITY, OTOE COUNTY, NEBRASKA

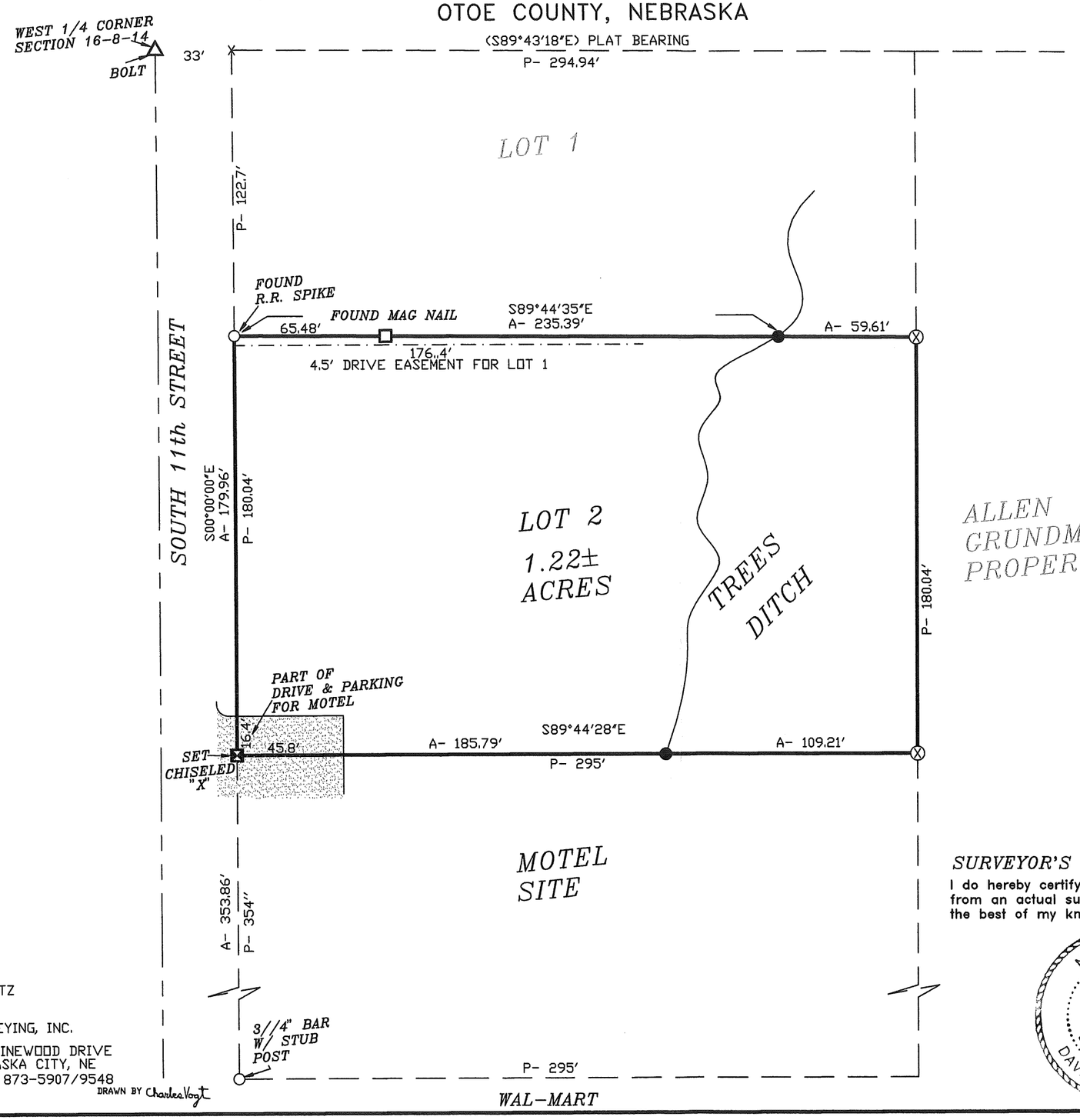

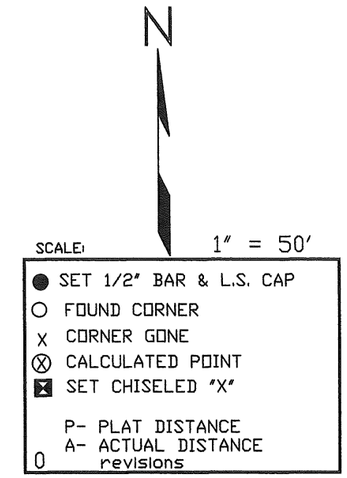

ALLEN GRUNDMAN PROPERY

WEST 1/4 CORNER SECTION 16-8-14
FOUND BOLT
S.E. 30.50' TO 20d NAIL IN P.P.
N.E. 17.12' TO ℄ M.H.
N.W. 59.39' TO X-NAILS IN P.P.
N.W. 66.93' TO ℄ M.H.
W.N.W. 46.56' TO NAIL/PLASTIC IN L.P.
E. 18.5' TO EAST BACK OF CURB

Survey Record Repository
RECEIVED
500
JAN 23 2012
OTOE
1054-563

SURVEYOR'S CERTIFICATE

I do hereby certify that, under my personal supervision, this survey plat was prepared from an actual survey completed this 20th day of December 2011, and is correct to the best of my knowledge.

NEBRASKA REGISTERED LS-391 LAND SURVEYOR DAVID L. SCHMITZ

David L. Schmitz, Registered Land Surveyor
Nebraska Reg. No. 391

SCHMITZ
LAND
SURVEYING, INC.
406 PINEWOOD DRIVE
NEBRASKA CITY, NE
(402) 873-5907/9548

DRAWN BY Charles Vogt